US009944022B2

(12) **United States Patent**
Robinson

(10) **Patent No.: US 9,944,022 B2**
(45) **Date of Patent: Apr. 17, 2018**

(54) **PIN AND VOID SYSTEMS AND METHODS FOR CONNECTING 3D-PRINTABLE OBJECTS**

(71) Applicant: **Ghost Capital, Inc.**, Cincinnati, OH (US)

(72) Inventor: **Brian Quincy Robinson**, Cincinnati, OH (US)

(73) Assignee: **Ghost Capital, Inc.**, Cincinnati, OH (US)

(*) Notice: Subject to any disclaimer, the term of this patent is extended or adjusted under 35 U.S.C. 154(b) by 546 days.

(21) Appl. No.: **14/675,091**

(22) Filed: **Mar. 31, 2015**

(65) **Prior Publication Data**

US 2016/0082661 A1 Mar. 24, 2016

Related U.S. Application Data

(60) Provisional application No. 62/052,223, filed on Sep. 18, 2014, provisional application No. 62/104,154, filed on Jan. 16, 2015.

(51) **Int. Cl.**

B29C 67/00	(2017.01)
G05B 19/4099	(2006.01)
B33Y 50/02	(2015.01)

(52) **U.S. Cl.**

CPC ***B29C 67/0088*** (2013.01); ***G05B 19/4099*** (2013.01); *B33Y 50/02* (2014.12); *G05B 2219/35134* (2013.01); *G05B 2219/49007* (2013.01); *Y02P 90/265* (2015.11)

(58) **Field of Classification Search**

CPC . B29C 67/0088; B33Y 50/02; G05B 19/4099; G05B 2219/35134; G05B 2219/49007; Y02P 90/265

See application file for complete search history.

(56) **References Cited**

U.S. PATENT DOCUMENTS

7,744,801	B2	6/2010	Owada	
7,988,168	B2	8/2011	Miroewski	
9,429,935	B2 *	8/2016	Boyl-Davis	G05B 19/40931
2005/0251283	A1 *	11/2005	Shovan	G05B 19/4099 700/145
2008/0205763	A1 *	8/2008	Marsh	B64F 5/10 382/190
2013/0059436	A1 *	3/2013	Rinerson	G11C 11/5685 438/598
2014/0303764	A1 *	10/2014	Boyl-Davis	G05B 19/40931 700/98
2015/0246278	A1 *	9/2015	Ritter	A63C 5/02 280/626

* cited by examiner

Primary Examiner — Abdelmoniem Elamin
(74) *Attorney, Agent, or Firm* — Ulmer & Berne LLP

(57) **ABSTRACT**

Embodiments include an apparatus, generated using a 3D printer, the apparatus including an object, the object being fabricated from a 3D printer, the object including a first part of the object, the first part of the object defining a first void and a second part of the object, the second part of the object defining a second void. The apparatus can include a pin, the pin having a first end and a second end, where the first end of the pin engages the first void of the object and the second end of the pin engages the second end of the pin such that the first part is coupled with the second part to form the object.

20 Claims, 11 Drawing Sheets

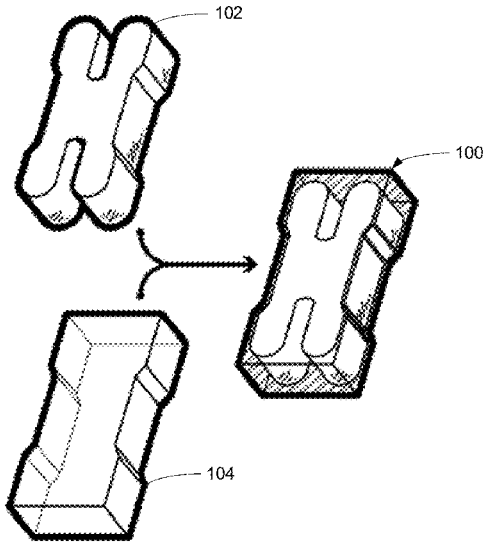

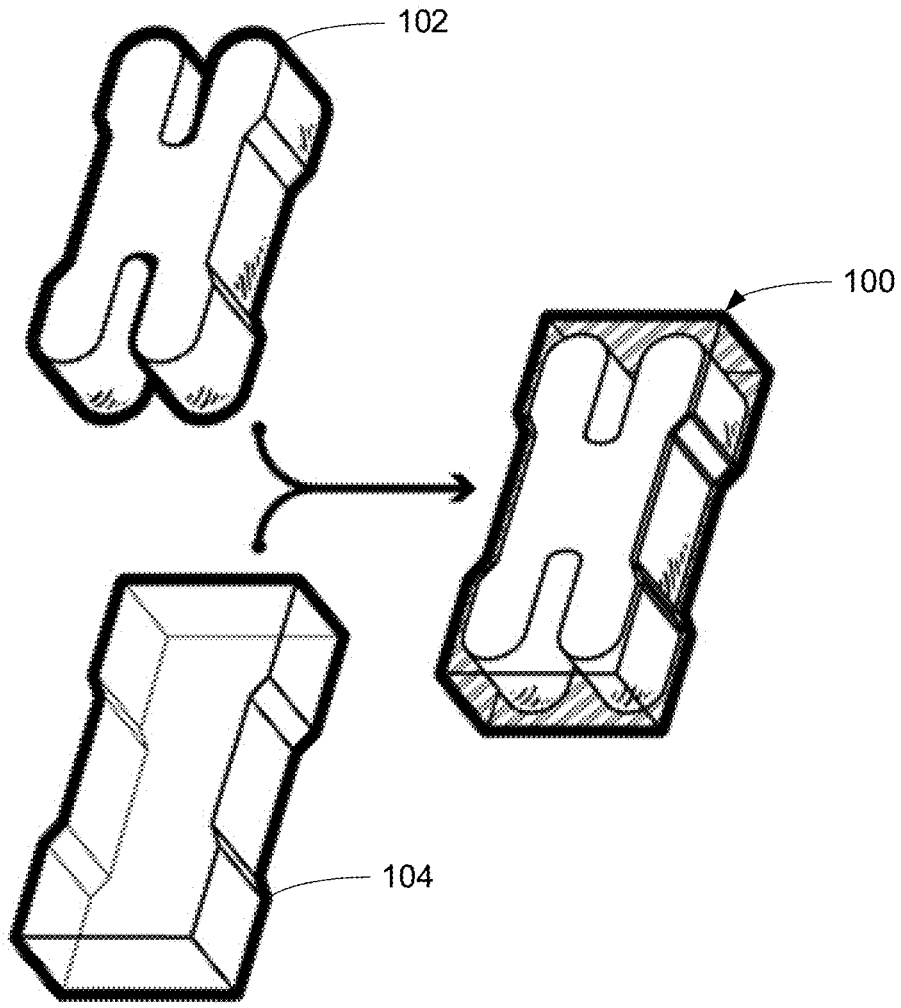

FIG. 1

FIG. 2A

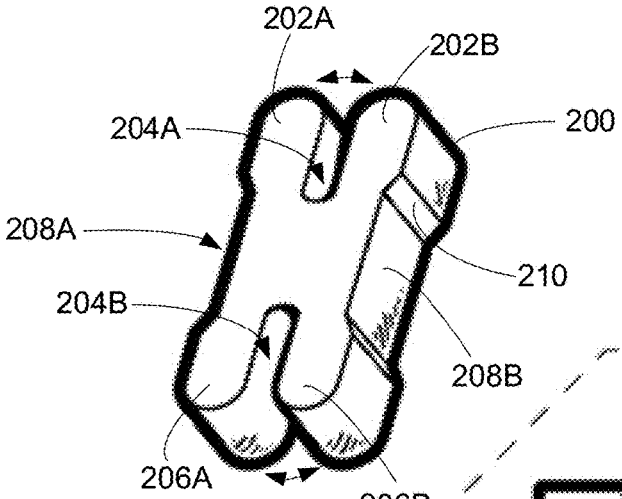
202A
202B
204A
200
208A
210
204B
208B
206A
206B

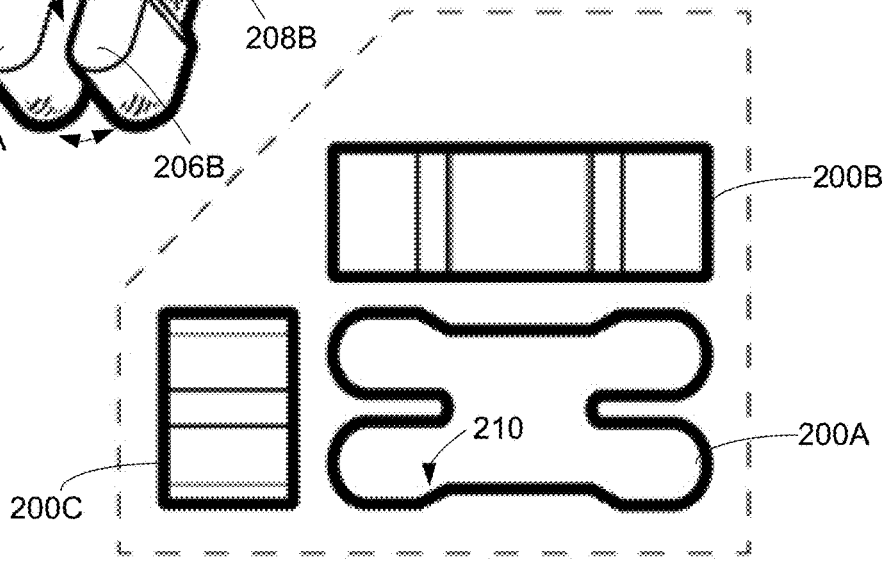
200B
210
200A
200C

FIG. 2B

FIG. 3A

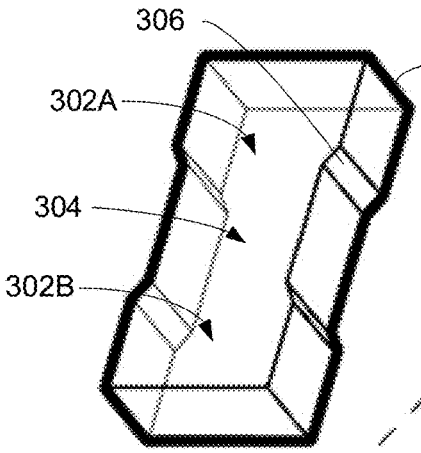

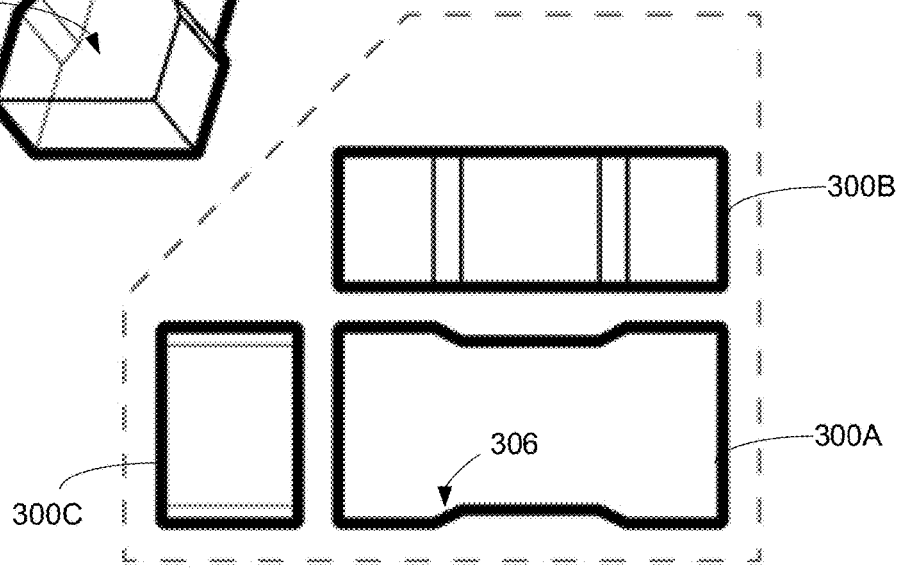

FIG. 3B

400

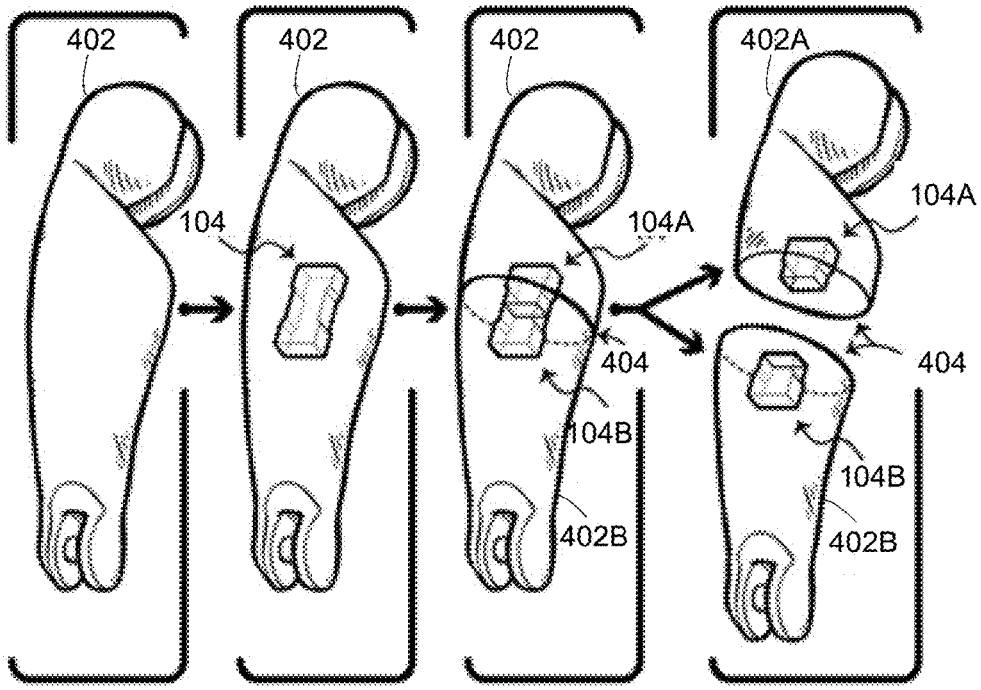

FIG. 4A FIG. 4B FIG. 4C FIG. 4D

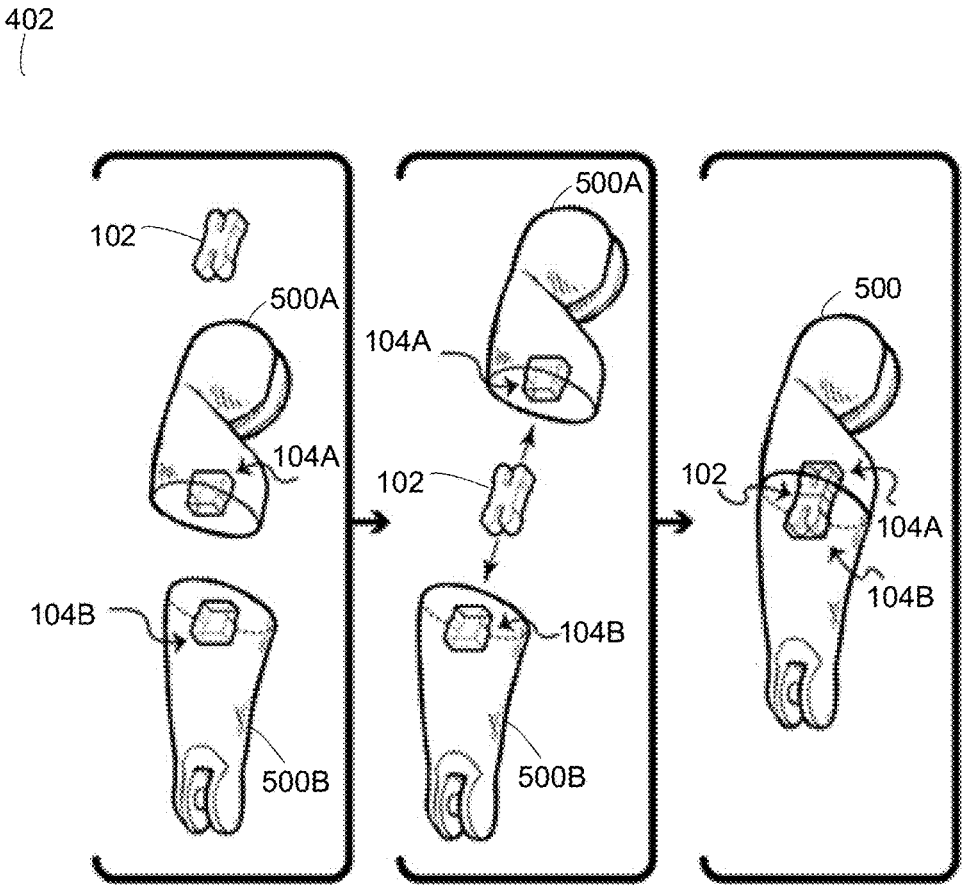

FIG. 5A FIG. 5B FIG. 5C

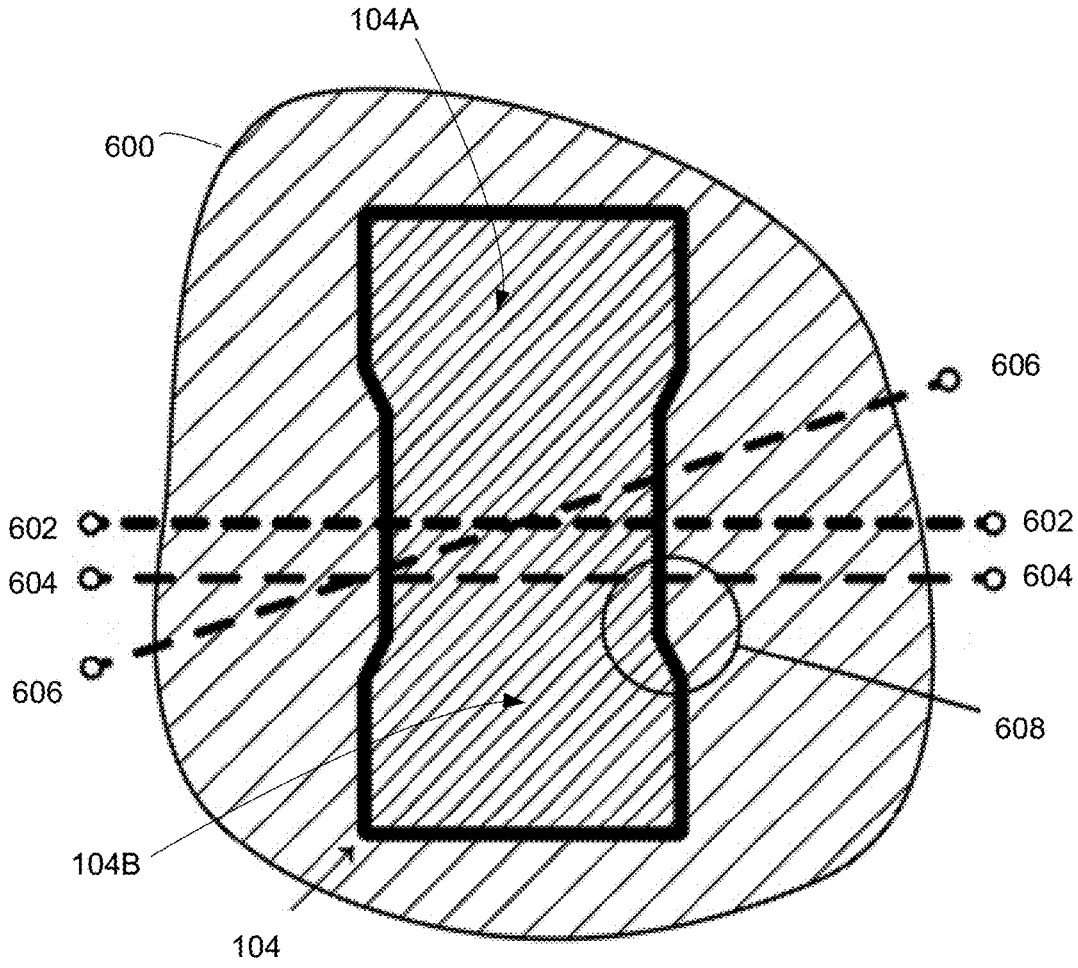

FIG. 6

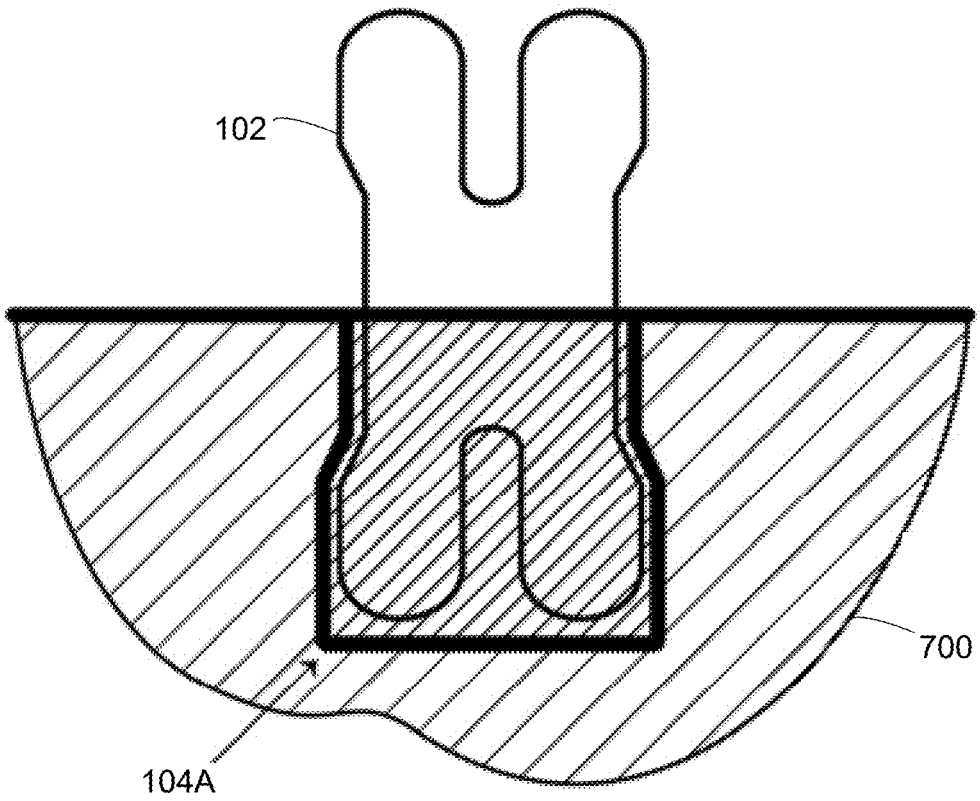

FIG. 7

FIG. 8A

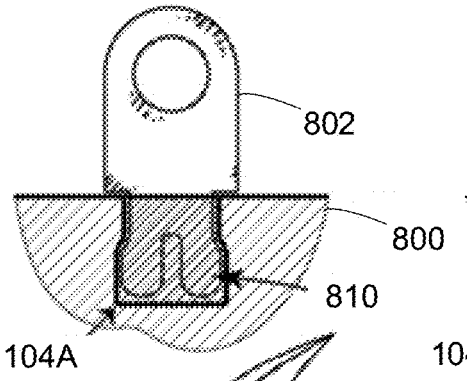

FIG. 8B

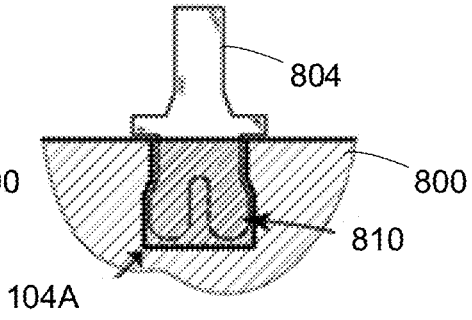

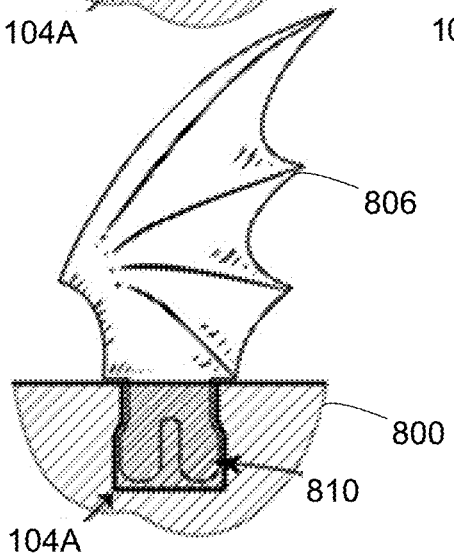

FIG. 8C

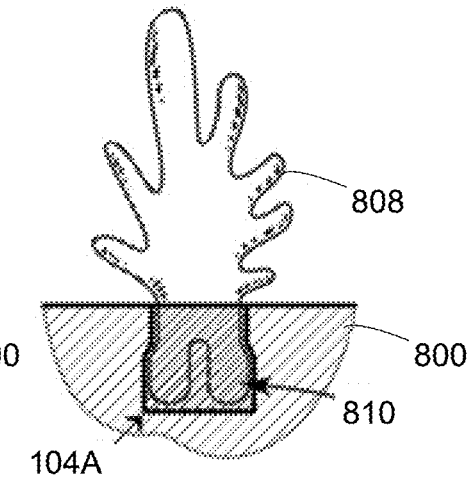

FIG. 8D

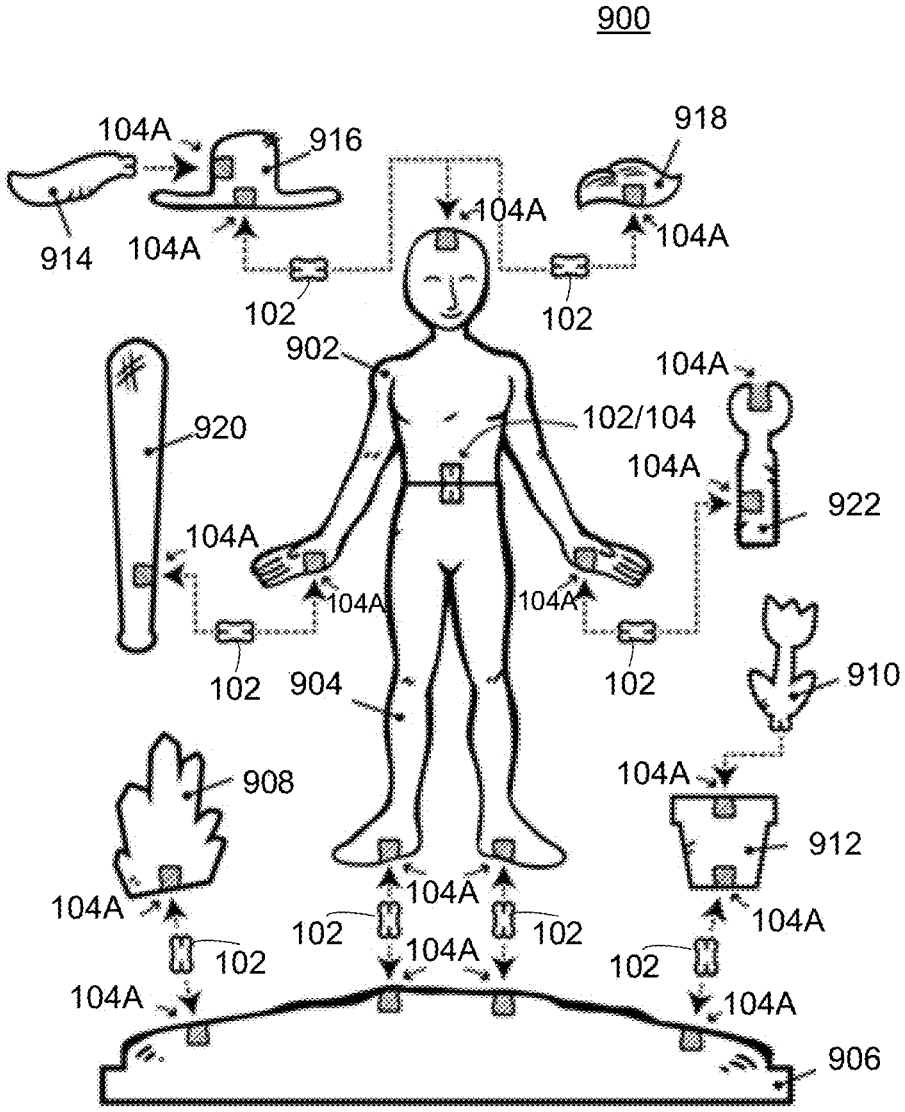
900
104A
916
918
914
104A
104A
104A
102
102
902
104A
920
102/104
104A
922
104A
104A
104A
102
904
102
910
908
104A
912
104A
104A
102
102
104A
102
104A
102
104A
104A
906

FIG. 9

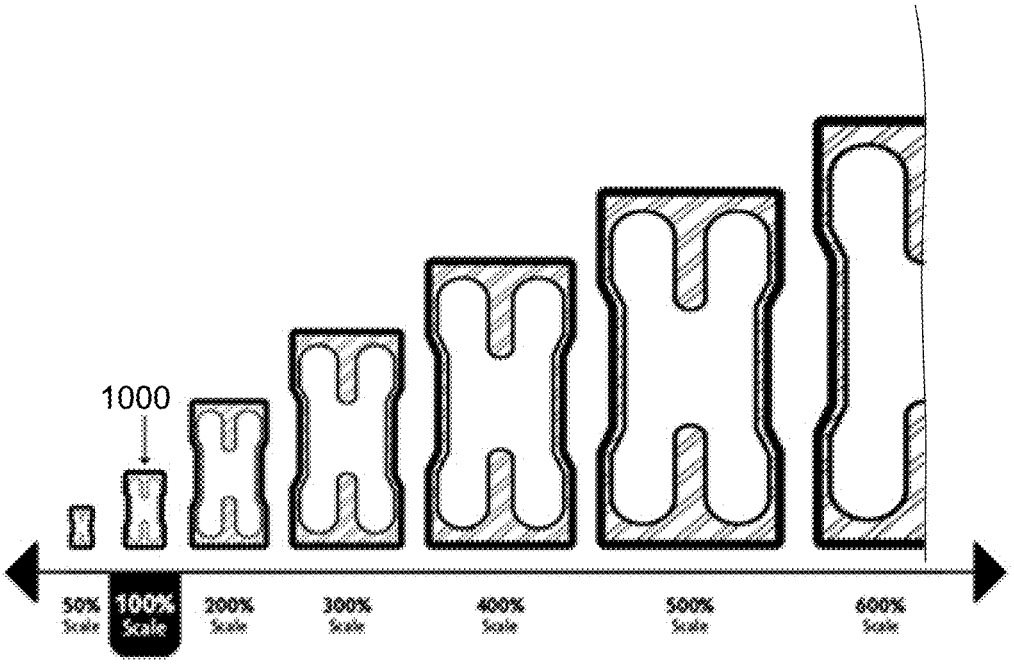

FIG. 10

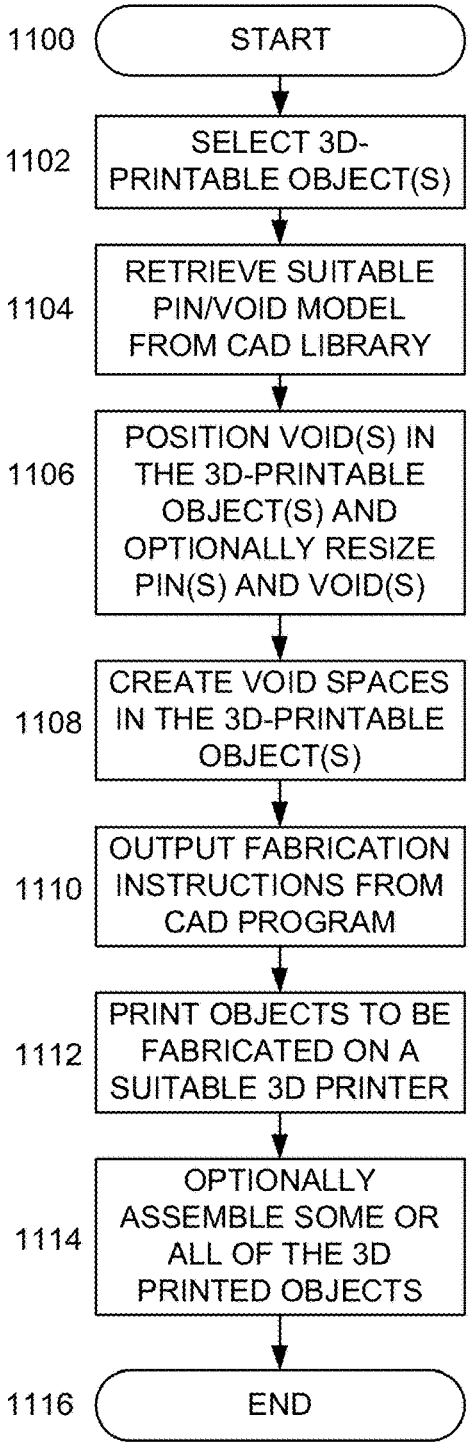
1100
START
1102
SELECT 3D-PRINTABLE OBJECT(S)
1104
RETRIEVE SUITABLE PIN/VOID MODEL FROM CAD LIBRARY
1106
POSITION VOID(S) IN THE 3D-PRINTABLE OBJECT(S) AND OPTIONALLY RESIZE PIN(S) AND VOID(S)
1108
CREATE VOID SPACES IN THE 3D-PRINTABLE OBJECT(S)
1110
OUTPUT FABRICATION INSTRUCTIONS FROM CAD PROGRAM
1112
PRINT OBJECTS TO BE FABRICATED ON A SUITABLE 3D PRINTER
1114
OPTIONALLY ASSEMBLE SOME OR ALL OF THE 3D PRINTED OBJECTS
1116
END

FIG. 11

PIN AND VOID SYSTEMS AND METHODS FOR CONNECTING 3D-PRINTABLE OBJECTS

REFERENCE TO RELATED APPLICATIONS

This application claims priority to U.S. Provisional Patent Application No. 62/104,154 filed on Jan. 16, 2015 and U.S. Provisional Patent Application No. 62/052,223 filed on Sep. 18, 2014, the disclosures of which are incorporated by reference herein in their entirety.

TECHNICAL FIELD

Embodiments of the technology relate, in general, to a pin and void model for connecting 3D-printed objects, and in particular to systems and methods of generating pins and voids in computer-aided-design (CAD) models and printing the same using 3D printers.

BACKGROUND

In recent years, 3D printing has been demonstrated to be an effective technique for accurately forming 3D objects, such as for the purpose of prototyping and manufacture. In its most general sense, 3D printing typically utilizes a 3D scanner and/or computer software to generate an image map of a desired object. That image map is then translated into a grid-like structure such that a fabrication device can deposit a flowable material, such as a plastic, polymer, biomaterial or resin, via an additive process, which is simultaneously solidified creating a 3D object. Various existing 3D printing methodologies which provide unique advantages and also each have their own disadvantages.

BRIEF DESCRIPTION OF THE DRAWINGS

The present disclosure will be more readily understood from a detailed description of some example embodiments taken in conjunction with the following figures:

FIG. **1** depicts a CAD model of an example pin and an associated void, according to one embodiment.

FIG. **2**A depicts an isometric view of an example pin, according to one embodiment.

FIG. **2**B depicts orthographic views of the example pin of FIG. **2**A, according to one embodiment.

FIG. **3**A depicts an isometric view of an example void associated with FIGS. **2**A and **2**B, according to one embodiment.

FIG. **3**B depicts orthographic views of the example void of FIG. **3**A, according to one embodiment.

FIGS. **4**A-**4**D depict an example incorporation of a void, as part of a pin and void system, into a 3D-printable item, according to one embodiment.

FIGS. **5**A-**5**C depict an example assembly of the 3D-printable items of FIGS. **4**A-**4**D using the pin and void system, according to one embodiment.

FIG. **6** depicts example bisections of a void, according to one embodiment.

FIG. **7** depicts an insertion of a pin into a void, according to one embodiment.

FIGS. **8**A-**8**D depict the attachment of 3D-printable items incorporating a portion of a pin to an object having a void, according to one embodiment.

FIG. **9** depicts an assembly of example 3D-printable objects, according to one embodiment.

FIG. **10** depicts example sizes of pins and voids, according to one embodiment.

FIG. **11** depicts example operations for incorporating pins and voids into a 3D-printable object, according to one embodiment.

SUMMARY

Embodiments include a method of generating a 3D-printable object and an associated pin including selecting an object to be fabricated with a 3D printer, designing the object with a computer aided design program having a pin and void template, separating the object into a first part and a second part using the computer aided design program, designing a first void defined by the first part, designing a second void defined by the second part, designing a pin, where the pin is sized to engage the first void and the second void, printing the first part, the second part, and the pin with the 3D printer, and coupling the first part to the second part with the pin to assemble the object.

Embodiments include an apparatus, generated using a 3D printer, the apparatus including an object, the object being fabricated from a 3D printer, the object including a first part of the object, the first part of the object defining a first void and a second part of the object, the second part of the object defining a second void. The apparatus can include a pin, the pin having a first end and a second end, where the first end of the pin engages the first void of the object and the second end of the pin engages the second end of the pin such that the first part is coupled with the second part to form the object.

An apparatus, generated using a 3D printer, including a first object, the first object being fabricated from a 3D printer, the object defining a void, where the void includes an aperture and an indented portion and a second object, the second object being fabricated from a 3D printer, the second object including a pin having a pair of laterally flexible projections, where the pin engages the void via the aperture of the first object such that the first object is coupled with the second object and retained within the void by the indented portion.

DETAILED DESCRIPTION

Various non-limiting embodiments of the present disclosure will now be described to provide an overall understanding of the principles of the structure, function, and use of pin and void systems and methods disclosed herein. One or more examples of these non-limiting embodiments are illustrated in the selected examples disclosed and described in detail with reference made to FIGS. **1**-**11** in the accompanying drawings. Those of ordinary skill in the art will understand that systems and methods specifically described herein and illustrated in the accompanying drawings are non-limiting embodiments. The features illustrated or described in connection with one non-limiting embodiment may be combined with the features of other non-limiting embodiments. Such modifications and variations are intended to be included within the scope of the present disclosure.

The systems, apparatuses, devices, and methods disclosed herein are described in detail by way of examples and with reference to the figures. The examples discussed herein are examples only and are provided to assist in the explanation of the apparatuses, devices, systems and methods described herein. None of the features or components shown in the drawings or discussed below should be taken as mandatory

for any specific implementation of any of these the apparatuses, devices, systems or methods unless specifically designated as mandatory. For ease of reading and clarity, certain components, modules, or methods may be described solely in connection with a specific figure. In this disclosure, any identification of specific techniques, arrangements, etc. are either related to a specific example presented or are merely a general description of such a technique, arrangement, etc. Identifications of specific details or examples are not intended to be, and should not be, construed as mandatory or limiting unless specifically designated as such. Any failure to specifically describe a combination or sub-combination of components should not be understood as an indication that any combination or sub-combination is not possible. It will be appreciated that modifications to disclosed and described examples, arrangements, configurations, components, elements, apparatuses, devices, systems, methods, etc. can be made and may be desired for a specific application. Also, for any methods described, regardless of whether the method is described in conjunction with a flow diagram, it should be understood that unless otherwise specified or required by context, any explicit or implicit ordering of steps performed in the execution of a method does not imply that those steps must be performed in the order presented but instead may be performed in a different order or in parallel.

Reference throughout the specification to "various embodiments," "some embodiments," "one embodiment," "some example embodiments," "one example embodiment," or "an embodiment" means that a particular feature, structure, or characteristic described in connection with any embodiment is included in at least one embodiment. Thus, appearances of the phrases "in various embodiments," "in some embodiments," "in one embodiment," "some example embodiments," "one example embodiment," or "in an embodiment" in places throughout the specification are not necessarily all referring to the same embodiment. Furthermore, the particular features, structures or characteristics may be combined in any suitable manner in one or more embodiments.

Throughout this disclosure, references to components or modules generally refer to items that logically can be grouped together to perform a function or group of related functions. Like reference numerals are generally intended to refer to the same or similar components. Components and modules can be implemented in software, hardware, or a combination of software and hardware. The term "software" is used expansively to include not only executable code, for example machine-executable or machine-interpretable instructions, but also data structures, data stores and computing instructions stored in any suitable electronic format, including firmware, and embedded software. The terms "information" and "data" are used expansively and includes a wide variety of electronic information, including executable code; content such as text, video data, and audio data, among others; and various codes or flags. The terms "information," "data," and "content" are sometimes used interchangeably when permitted by context. It should be noted that although for clarity and to aid in understanding some examples discussed herein might describe specific features or functions as part of a specific component or module, or as occurring at a specific layer of a computing device (for example, a hardware layer, operating system layer, or application layer), those features or functions may be implemented as part of a different component or module or operated at a different layer of a communication protocol stack. Those of ordinary skill in the art will recognize that the systems, apparatuses, devices, and methods described herein can be applied to, or easily modified for use with, other types of equipment, can use other arrangements of computing systems such as client-server distributed systems, and can use other protocols, or operate at other layers in communication protocol stacks, than are described.

Described herein are example embodiments of systems and methods for incorporating pins and/or voids into 3D-printable objects. Although the present disclosure may be described in terms of a pin or a void and 3D-printable objects, this is done for convenience and ease of exposition only. The inventive principles described herein can be applied to both pins and voids as well as objects that have not been 3D-printed, as would be understood by one of ordinary skill in the art.

3D printing, also known as additive manufacturing, has historically been employed as a method to develop prototypes. The prototypes are generally created by advanced engineering professionals with experience using sophisticated CAD programs. In recent years, the cost of 3D printing hardware has dropped such that small businesses, serious hobbyists, and ordinary consumers can afford to purchase or use 3D-printing technology. However, creating 3D-printable objects generally still requires creating CAD files using CAD programs that are output into a format readable by 3D printers, such as a stereolithography file (.STL) that uses standard tessellation language. A wide range of CAD programs are commercially available. However most users require at least some training and experience using a CAD program in order to make even simple geometric forms such as a cup or cylinder. It can be a challenge for users to develop CAD models for their designs or products while also taking into account manufacturing and design constraints specific to 3D-printing technology.

For example, due to design constraints specific to 3D-printing technology, the end product can require joining multiple 3D-printed parts. In another example, a 3D-printed part may need to be joined to a traditionally manufactured part that is not a 3D-printed part. For example, one or more parts to which a 3D-printed part is to be joined may be created using injection molding, computer numerical control (CNC) machining, or some other traditional form of manufacturing parts as would be understood in the art. In yet another example, the end product may be designed to have interchangeable parts that are assembled either by a factory worker or by the end user. For example, a toy can come with a number of interchangeable parts for a child to customize and play with their toy.

A system and method for incorporating pins and/or voids into 3D-printable objects provides a two-part model for joining a 3D-printable object to another object, which may also be a 3D-printable object. The disclosed system and method allows scalable pins and/or voids to be used in a CAD program, allowing a suitably configured pin and/or void to be incorporated into the design of a 3D-printable object, and allowing instructions for making the 3D-printable object to be output in a format that is directly or indirectly usable by a 3D printer to make the 3D-printable object with the required pins and/or voids. The disclosed pin and void system allows for the fabrication of objects on a 3D printer without requiring additional support structures during fabrication, which generally require removal and resurfacing in post-production. The pin and void system also allows for attachment of the models' parts or attachment of the model to another object without need for glue in post-production The embodiments described herein make the creation of 3D-printed objects easier, less time consuming, less wasteful of material, and more efficient for users of

varied skill levels. The disclosed pin and void system also facilitates and guides designers and users in the design and selection of customized pins and voids to accomplish the objectives described in this disclosure.

Referring to FIG. **1**, an embodiment of a computer-aided-design (CAD) model, CAD model **100**, is presented. In the CAD model **100**, a pin **102** is configured to fit inside of the space defined by a void **104**. The pin **102** and void **104** can be configured such that, when parts having a pin **102** or void **104** are manufactured or 3D-printed, the parts have the desired tolerances to achieve design goals. Example design goals can include a loose fit between 3D-printed parts that allows some lateral, vertical, or rotational movement, a tight fit between 3D-printed parts that inhibits movement, a pin **102** of one part that can be repeatedly inserted and pulled out or extracted from a void **104** in another part without damaging either part, and a pin **102** that would be difficult or require substantial force to pull out of a void **104** in another 3D-printed part such that removal would be likely to cause deformation or damage to a part. The tolerances selected for the pin **102** and void **104** can depend upon the rigidity and strength of the materials used in the 3D printing of the parts, as well as the precision of the 3D printer itself. Other design goals and tolerances can be used as would be understood by one of ordinary skill in the art.

Referring now to FIG. **2**A, an isometric view of an embodiment of a pin **200** is presented. A pin **200** can include a first set of protrusions **202**A, **202**B that can be separated by a first gap **204**A and a second set of protrusions **206**A, **206**B that can be separated by a second gap **204**B. The pin **200** can include a first indent **208**A between one of the first protrusions **202**A and one of the second protrusions **206**A, and a second indent **208**B between the other of the first protrusions **202**B and the other of the second protrusions **206**B. In an embodiment, the first set of protrusions **202**A, **202**B can be configured to bend or flex in the direction of one another, such as inwardly and outwardly, as illustrated by the curvilinear arrows such that the first gap **204**A narrows. Similarly the second set of protrusions **206**A, **206**B are configured to bend in the direction of one another as illustrated by the curvilinear arrows such that the second gap **204**B narrows. This bending or flexing can allow the width of the pin **200** at the protrusions **202**A, **202**B, **206**A, **206**B to decrease, allowing the pin **200** to be inserted into a void (not shown; see for example FIG. **7** among other figures) or removed from the void. Detent walls **210** can be angled, shaped, or otherwise modified to facilitate or inhibit the insertion or removal of the pin **200** from a void. By adjusting the angle or shape of the detent walls **210**, contact forces between the detent walls **210** and a void can be configured to facilitate the bending of the protrusions **202**A, **202**B, **206**A, **206**B during removal of the pin **200** from a void. The detent walls **210** can be configured in conjunction with the shape of a void, or independently of the void, in order to facilitate the insertion and removal of the pin **200** into the void, inhibit the removal of the pin **200** from the void, or lock the pin **200** in the void as would be understood by one of ordinary skill in the art. In one embodiment, the pin **200** can have a substantially dog bone-shaped configuration.

Referring now also to FIG. **2**B, orthographic views **200**A, **200**B, **200**C of the pin **200** are presented, including a top view **200**A of the pin **200**, a side view **200**B of the pin **200** along the long axis of the pin **200**, and a side view **200**C of the pin **200** along the short axis of the pin **200**. In this embodiment of the pin **200**, the detent walls **210** are angled such that when the pin **200** is being removed from a void, the forces impinging upon the detent walls **210** will bend the ends of the pin **200** inward, allowing the pin **200** to narrow at the ends and be removed from a void.

Referring now to FIG. **3**A, an isometric view of an embodiment of a void **300** is presented. The void **300** has a first cavity **302**A at a first end, and a second cavity **302**B at a second end. Between the first cavity **302**A and the second cavity **302**B is an indented cavity **304**. The void **300** can be configured with detent walls **306** to facilitate or inhibit the insertion and removal of a pin (not shown; see for example FIGS. **2** and **7**). Referring now also to FIG. **3**B, orthographic views **300**A, **300**B, **300**C of the void **300** are presented, including a top view **300**A of the void **300**, a side view **300**B of the void **300** along the long axis of the void **300**, and a side view **300**C of the void **300** along the short axis of the void **300**. In this embodiment of the void **300**, the detent walls **306** of the void **300** are angled such that when a pin is to be removed from the void **300**, the forces from the detent walls **306** of the void **300** impinge upon the detent walls of the pin which bend the ends of the pin inward, allowing the pin to narrow at the ends and be removed from the void **300**. In an embodiment, the material surrounding the indented cavity **304** can be configured to flex or distend to allow removal of a pin from a void cavity **302**A, **302**B. In an embodiment, the pin can be a rigid pin. In this embodiment, the material surrounding the void **300** can be configured to flex or distend to allow insertion and/or removal of the rigid pin.

Referring now to FIGS. **4**A-**4**D, example operations illustrating the incorporation of void **104**, of a pin and void system, into the CAD drawings **400** of a 3D-printable item **402** are presented. In FIG. **4**A, the CAD drawing **400** of a 3D-printable item **402** is selected. In FIG. **4**B, a void **104** is placed in a suitable position in the interior of the item **402**. For example, the void **104** can be placed approximately in the midpoint of the item **402**. In FIG. **4**C, based on the position of the void **104**, the item **402** can be bisected along a plane **404** such that the item **402** can be divided into a first part of the item **402**A and a second part of the item **402**B and separately 3D printed. In a configuration, the plane **404** and void **104** can be configured such that the plane **404** also divides the void **104** into two equal halves, void space **104**A and void space **104**B, within the indented portion of the void **104** such that each void space **104**A, **104**B includes a portion of the indented portion and a separate cavity. In various configurations, the plane **404** can be a shaped surface that is not flat and therefore not a true plane, or the plane **404** can divide the void **104** unequally as explained in greater detail with regard to FIG. **6** and the associated detailed description.

Referring now to FIGS. **5**A-**5**C, example operations illustrating the assembly of a 3D-printed item **500** using a pin and void system **102**, **104** is presented. A first part of the 3D-printed item **500**A can be fabricated, for example by 3D printing the first part of the item **402**A from the CAD drawing **400** of FIG. **4**D. Similarly, a second part of the 3D-printed item **500**B can be fabricated by 3D printing the second part of the item **402**B using the CAD drawing **400** of FIG. **4**D. Additionally, a pin **102** can be fabricated, for example by 3D printing the pin **102** or by manufacturing the pin **102** using some other process such as injection molding or stamping. The pin **102** can be configured to be inserted into void space **104**A and void space **104**B as illustrated in FIGS. **5**B and **5**C. In FIG. **5**B, the first part of the 3D-printed item **500**A and the second part of the 3D-printed item **500**B can be aligned such that pin **102** can be inserted into void space **104**A and void space **104**B. The pin **102** can be first inserted into either part **500**A, **500**B, or can be inserted into both parts **500**A, **500**B at approximately the same time. The

two parts **500**A, **500**B can be brought together and the pin **102** can be retained in void space **104**A and void space **104**B to secure the two parts **500**A, **500**B together into the assembled item **500**. In an embodiment, other force-generating means also can be used to secure the parts **500**A, **500**B, for example glue, welding or melting of the parts **500**A, **500**B, and other such means as would be understood by one of ordinary skill in the art.

Referring now also to FIG. **6**, the void **104** can be divided into void space **104**A and void space **104**B, such that when an item **600** is divided into two parts, each part will retain one void space **104**A, **104**B. In a first embodiment, the void **104** can be divided at the center of the void **104** perpendicular to the long axis of the void **104**. A first plane **602** can bisect the void **104** into two approximately equal void spaces **104**A, **104**B. In a second embodiment, the void **104** can be divided using a second plane **604** offset from the center of the void **104** perpendicular to the long axis of the void **104**. In a third embodiment, the void **104** can be divided using an angled plane **606** that divides the void **104** at an angle relative to the long axis of the void **104**. In these embodiments, each void space **104**A, **104**B can include a separate cavity. Each void space **104**A, **104**B taken together can form the void **104**, where a plurality of planes can divide the void **104** into functional void spaces **104**A, **104**B. Each void space **104**A, **104**B can also include at least part of the indented portion **608** of the void **104**, for example as circled in FIG. **6**. The indented portion can ensure that each void space **104**A, **104**B narrows near the aperture or opening such that a pin (not shown) can be retained in each void space **104**A, **104**B.

Referring now also to FIG. **7**, a pin **102** can be inserted into a void space **104**A of a fabricated item **700**, for example an item **700** that has been 3D printed to include the void space **104**A. In this embodiment, the other end of the pin **102** can be inserted into the void space of a different item (not shown) in order to be secured or connected to the item **700**.

Referring now also to FIGS. **8**A-**8**D, an object **802**, **804**, **806**, **808** can include a pin portion **810** that can be configured to secure the object **802**, **804**, **806**, **808** to an item **800** that includes a void space **104**A. In various non-limiting embodiments, an object **802**, **804** can include a utility feature such as a hole object **802** or a post object **804**. For example, the hook object **802** can provide a hole through which a hook, loop, string or other means of attachment can be passed. In this way, the hole object **802** can provide the utility of allowing something to be tethered or attached to the item **800**. In other non-limiting embodiments, an object **806**, **808** can include an ornamental feature such as a wing object **806** or webbed object **808**. For example, a wing object **806** can be inserted into an item **800** that is a toy to provide ornamental wings. Other objects having utilitarian, ornamental, or other features can be secured to an item **800** as would be understood by one of ordinary skill in the art.

Referring now also to FIG. **9**, an example toy item **900** is presented. The toy item **900** can include various objects **902**, **904**, **906**, **908**, **910**, **912**, **914**, **916**, **918**, **920**, **922** that can be attached together in various combinations. For example, an upper torso **902** can be attached to a lower torso **904** using a pin **102** and void **104** as described above. The lower torso **904** can be attached to a base **906** or stand using one or more pins **102** and voids **104** in the feet of the lower torso **904** and the base **906**. A crystal **908** can similarly be attached to the base **906**. A flower **910** can be attached to a flower pot **912** that can in turn be attached to the base **906**. A feather **914** can be attached to a hat **916** that can be attached to the head of the upper torso **902**. Alternatively, a hair piece or toupee **918** can be attached to the head of the upper torso **902**. A bat **920** can be attached to a hand of the upper torso **902**. A wrench **922** can be attached to the other hand of the upper torso **902**. Because each object **902**, **904**, **906**, **908**, **910**, **912**, **914**, **916**, **918**, **920**, **922** can use the same pin **102** and void **104** system, any number of attachment combinations can be obtained while playing with the toy item **900**. In a configuration, one or more of the pins **102** and voids **104** can be sized or shaped differently than other pins **102** and voids **104**.

Referring now also to FIG. **10**, the pin and void system **1000** can be resized based on the intended use in securing items together. Although illustrated in embodiments having a scale from 50% up to 600%, any suitable scale can use used.

Referring now to FIG. **11**, example operations for incorporating a pin and void system into a 3D-printable object are presented. Processing starts at start block **1100** and continues to process block **1102**.

In process block **1102**, a user of a CAD program selects a 3D-printable object to be fabricated. For example, a user can load an existing 3D-printable object or design a 3D-printable object in the CAD program, among other available options. Processing continues to process block **1104**.

In process block **1104**, a suitable pin and void template is loaded into the CAD program. For example, the pin and void template can be retrieved from a library of templates configured to be used with the CAD program. In another example, a suitable pin and void system can be created or adopted by a designer or user without departing from the scope of the invention, however so created or secured by the designer or user. Processing continues to process block **1106**.

In process block **1106**, the user can position the void at a desired place in the 3D-printable object to be fabricated. The user can optionally resize the pin and void. Processing continues to process block **1108**.

In process block **1108**, one or more void spaces are created in the 3D-printable object. For example, in a configuration the user can bisect the 3D-printable object such that a suitable void space remains in each part of the 3D-printable object as described above. In a configuration, the user can divide the 3D-printable object into multiple parts with multiple void spaces. In a configuration, the 3D-printable object is not bisected or divided, and instead one or more suitable void spaces are positioned in the 3D-printable object. Processing continues to process block **1110**.

In process block **1110**, instructions for fabricating the parts of the 3D-printable object and/or pin can be output from the CAD program. For example, one or more stereolithography files can be generated. In another example, instructions can be sent directly to a 3D printer. Other methods of processing to produce suitable instructions and/or data for fabricating one or more parts on a 3D printer are also contemplated as would be understood by one of ordinary skill in the art. Processing continues to process block **1112**.

In process block **1112**, one or more parts of the 3D-printable object can be fabricated, for example by printing on a 3D printer. In a configuration, one or more parts can be fabricated or obtained using other processes. For example, a pin formed by injection molding or stamping can be obtained instead of being 3D printed. Processing continues to process block **1114**.

In process block **1114**, the 3D-printable object optionally can be assembled using one or more pins to attach together

one or more parts of the 3D-printed object. Processing terminates at end block **1116**.

Some of the operations described in process blocks **1102** through **1114** can be performed in different orders without departing from the scope of the disclosure, as would be understood by one of ordinary skill in the art.

I claim:

1. A method of generating a 3D-printable object and an associated pin comprising:

selecting an object to be fabricated with a 3D printer;

designing the object with a computer aided design program having a pin and void template;

separating the object into a first part and a second part using the computer aided design program;

designing a first void defined by the first part;

designing a second void defined by the second part;

designing a pin, wherein the pin is sized to engage the first void and the second void;

printing the first part, the second part, and the pin with the 3D printer; and

coupling the first part to the second part with the pin to assemble the object.

2. The method of claim **1**, wherein the first void includes a first aperture defined by the first part and the second void includes a second aperture defined by the second part.

3. The method of claim **2**, wherein the first aperture and the second aperture are sized such that the pin is retained therein upon insertion.

4. The method of claim **3**, wherein the first aperture includes a first indented portion and the second aperture includes a second indented portion.

5. The method of claim **4**, the pin including a first set of projections and a second set of projections, wherein the first set of projections engage the first void and the second set of projections engage the second void.

6. The method of claim **5**, wherein each of the first set of projections and each of the second set of projections is a living hinge.

7. The method of claim **6**, wherein each of the first set of projections is flexed inwardly for insertion into the first void and, once inserted, is flexed outwardly to secure the pin to the first part of the object.

8. The method of claim **7**, wherein the pin has a substantially dog bone shaped configuration.

9. The method of claim **1**, wherein the first void and the second void have substantially the same configuration.

10. The method of claim **1**, wherein the first void and the second void, taken together, form a void shape that is substantially functional when divided by a plurality of planes.

11. An apparatus, generated using a 3D printer, comprising:

(a) an object, the object being fabricated from a 3D printer, the object including;

(i) a first part of the object, the first part of the object defining a first void; and

(ii) a second part of the object, the second part of the object defining a second void; and

(b) a pin, the pin having a first end and a second end, wherein the first end of the pin engages the first void and the second end of the pin engages the second void such that the first part is coupled with the second part to form the object.

12. The apparatus of claim **11**, wherein the first void includes a first aperture defined by the first part and the second void includes a second aperture defined by the second part.

13. The apparatus of claim **12**, wherein the first aperture and the second aperture are sized such that the pin is retained at least partially within the first void and the second void once inserted.

14. The apparatus of claim **13**, wherein the first aperture includes a first indented portion and the second aperture includes a second indented portion.

15. The apparatus of claim **14**, the pin including a first set of projections and a second set of projections, wherein the first set of projections engage the first void and the second set of projections engage the second void.

16. The apparatus of claim **15**, wherein each of the first set of projections and each of the second set of projections is a living hinge.

17. The apparatus of claim **16**, wherein each of the first set of projections is flexed inwardly for insertion into the first void and, once inserted, is flexed outwardly to secure the first end of the pin to the first part of the object.

18. An apparatus, generated using a 3D printer, comprising:

(a) a first object, the first object being fabricated from a 3D printer, the first object defining a void, wherein the void includes an aperture and an indented portion; and

(b) a second object, the second object being fabricated from a 3D printer, the second object including a pin having a pair of laterally flexible projections, wherein the pin engages the void via the aperture of the first object such that the first object is coupled with the second object and retained within the void by the indented portion.

19. The apparatus of claim **18**, wherein the first object includes a plurality of voids configured to engage a plurality of second objects.

20. The apparatus of claim **18**, wherein the second object is selectively removable from the first object.

* * * * *